WINDSTAR *Installation Instructions*

NOTE: With this product, it is necessary to install plates on both sides because this product affects ride height.

1. Do pre-alignment checks. Inspect car for damaged, bent or worn parts and repair as necessary. Install alignment equipment and determine amount of camber/ caster change required. Raise front of vehicle so suspension hangs freely, and support safely. It is not necessary to remove wiper assembly to install this kit.
2. Remove pinch bolt holding strut into knuckle. Remove bracket holding ABS wire to strut. Remove upper end of sway bar link from strut, being careful to keep threaded shaft from spinning. Use of an 8mm socket and 18mm box wrench is recommended. Remove the brake hose brackets from the strut and frame rail. Remove the tie rod end from the steering arm. Using a special strut removal tool or other means, push the knuckle downward off the bottom of the strut (see figure No. 1)
3. Using a 13mm serpentine belt wrench, and straight ratcheting box end wrench, remove the three mounting bracket nuts holding upper strut assembly to fender tower. **Note:** It is helpful on drivers side of vehicle to first remove air filter for easier access to mounting bracket.
4. Remove strut from vehicle and install in vise using suitable holder.
5. Remove the three OE strut mounting studs by driving the studs loose from the strut mount, then cut studs flush with top of mount using a magnet to retrieve bottom of studs from top strut plate.
6. Set adjustable camber plate on top of factory strut plate having lettered side facing up and the elongated holes matching the holes of the OE strut plate. From the underside of the camber plate, install the long allen head bolts through the three holes marked left or right. depending on which side of vehicle you are working on. (see figure No. 2)
7. The elongated holes correspond to five camber positions. ranging from 1/4 to 1-1/4 degrees positive camber. (see figure No. 3)
8. A fast procedure to bolt the adjustable camber plate and OE strut plate together, is place the self locking nut into a 1/2" box end wrench. Drop the wrench through the opening between the strut plate and upper spring seat. Slide the wrench as far forward as possible then rotate the wrench 90 degrees to the strut assembly. Use a pin punch to bring everything into alignment. While exerting pressure on end of wrench, install short allen bolt through camber plate in position needed for desired camber change. Hand tighten only. (see figure No. 4) Repeat this procedure for all three bolts then torque bolts to 26-30 ft. lbs. (35-40 N.m)
9. Install strut into fender tower using nuts and washers provided. rotate strut about 30 degrees toward the toe-out direction. Now "roll" the knuckle onto the base of the strut. Insert a round prybar in the pinch bolt hole in the knuckle, align the knuckle so it will slide up on the bottom of the strut (figure No. 5). Check the alignment of the tab at base of strut to the split in the knuckle. If necessary, insert the round prybar into the sway bar hole on the strut and rotate the strut to align the tab (see figure 6). Use a small bottle jack screw-type stand to slide the knuckle far enough to install the pinchbolt. Apply loctite to the threads and torque the nut to 85 ft. lbs. (115 N.m) Reinstall all parts removed in step No. 2
10. Repeat procedure on other side of vehicle.
11. Re-check camber and caster to verify changes. Finish alignment and road test the vehicle.

Figure No. 1

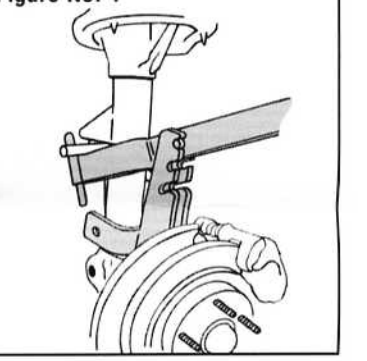

Figure No. 2

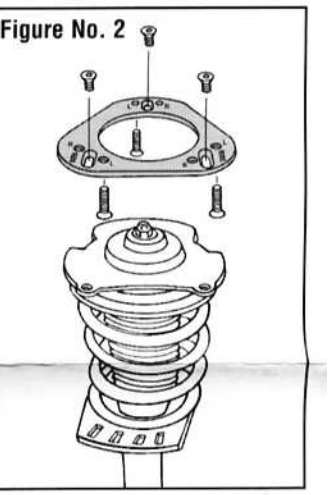

Figure No. 3

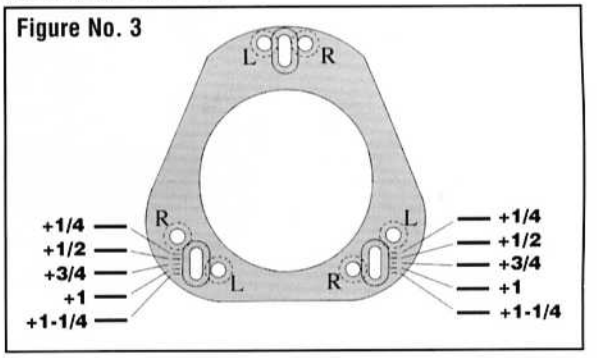

Figure No. 4

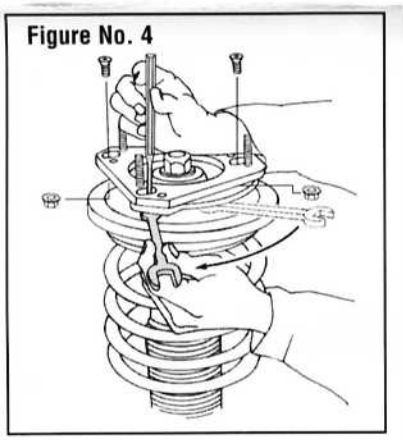

Figure No. 5

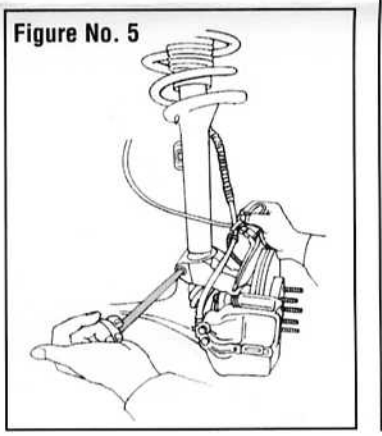

Figure No. 6